P/N: 600346577
REV.: 02-09/12

PARTS LIST: VHT 5200 / 319022004

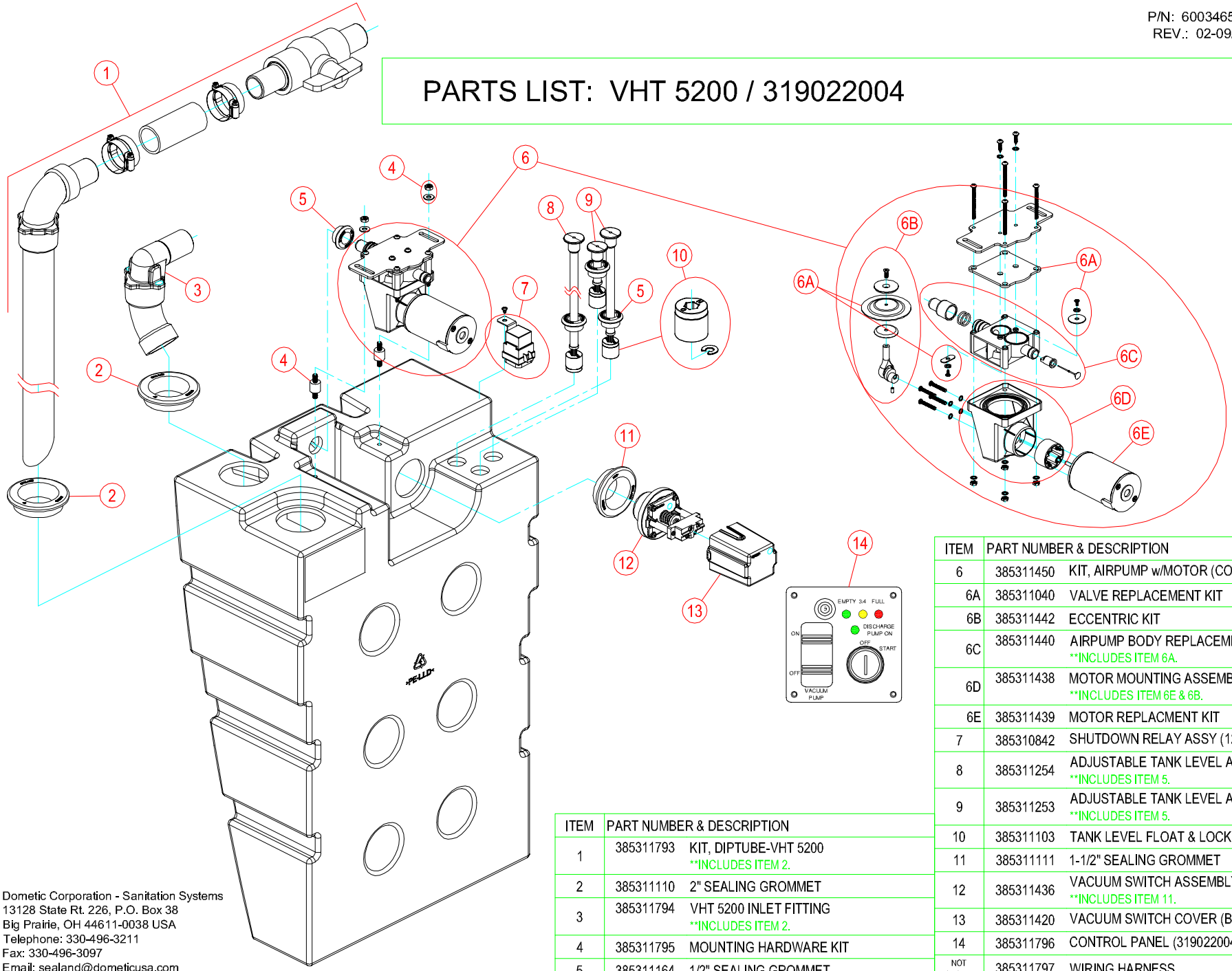

ITEM	PART NUMBER & DESCRIPTION	
1	385311793	KIT, DIPTUBE-VHT 5200 **INCLUDES ITEM 2.
2	385311110	2" SEALING GROMMET
3	385311794	VHT 5200 INLET FITTING **INCLUDES ITEM 2.
4	385311795	MOUNTING HARDWARE KIT
5	385311164	1/2" SEALING GROMMET

ITEM	PART NUMBER & DESCRIPTION	
6	385311450	KIT, AIRPUMP w/MOTOR (COMPLETE)
6A	385311040	VALVE REPLACEMENT KIT
6B	385311442	ECCENTRIC KIT
6C	385311440	AIRPUMP BODY REPLACEMENT **INCLUDES ITEM 6A.
6D	385311438	MOTOR MOUNTING ASSEMBLY **INCLUDES ITEM 6E & 6B.
6E	385311439	MOTOR REPLACMENT KIT
7	385310842	SHUTDOWN RELAY ASSY (12VDC)
8	385311254	ADJUSTABLE TANK LEVEL ASSY (24") **INCLUDES ITEM 5.
9	385311253	ADJUSTABLE TANK LEVEL ASSY (12") **INCLUDES ITEM 5.
10	385311103	TANK LEVEL FLOAT & LOCK RING
11	385311111	1-1/2" SEALING GROMMET
12	385311436	VACUUM SWITCH ASSEMBLY **INCLUDES ITEM 11.
13	385311420	VACUUM SWITCH COVER (BLACK)
14	385311796	CONTROL PANEL (319022004)
NOT SHOWN	385311797	WIRING HARNESS

Dometic Corporation - Sanitation Systems
13128 State Rt. 226, P.O. Box 38
Big Prairie, OH 44611-0038 USA
Telephone: 330-496-3211
Fax: 330-496-3097
Email: sealand@dometicusa.com

P/N: 600346577
REV.: 02-09/12

PARTS LIST: VHT 5200 / 319022004

WIRING DIAGRAM DWG REF.:
346612; SHEET 22; REV. 'A'

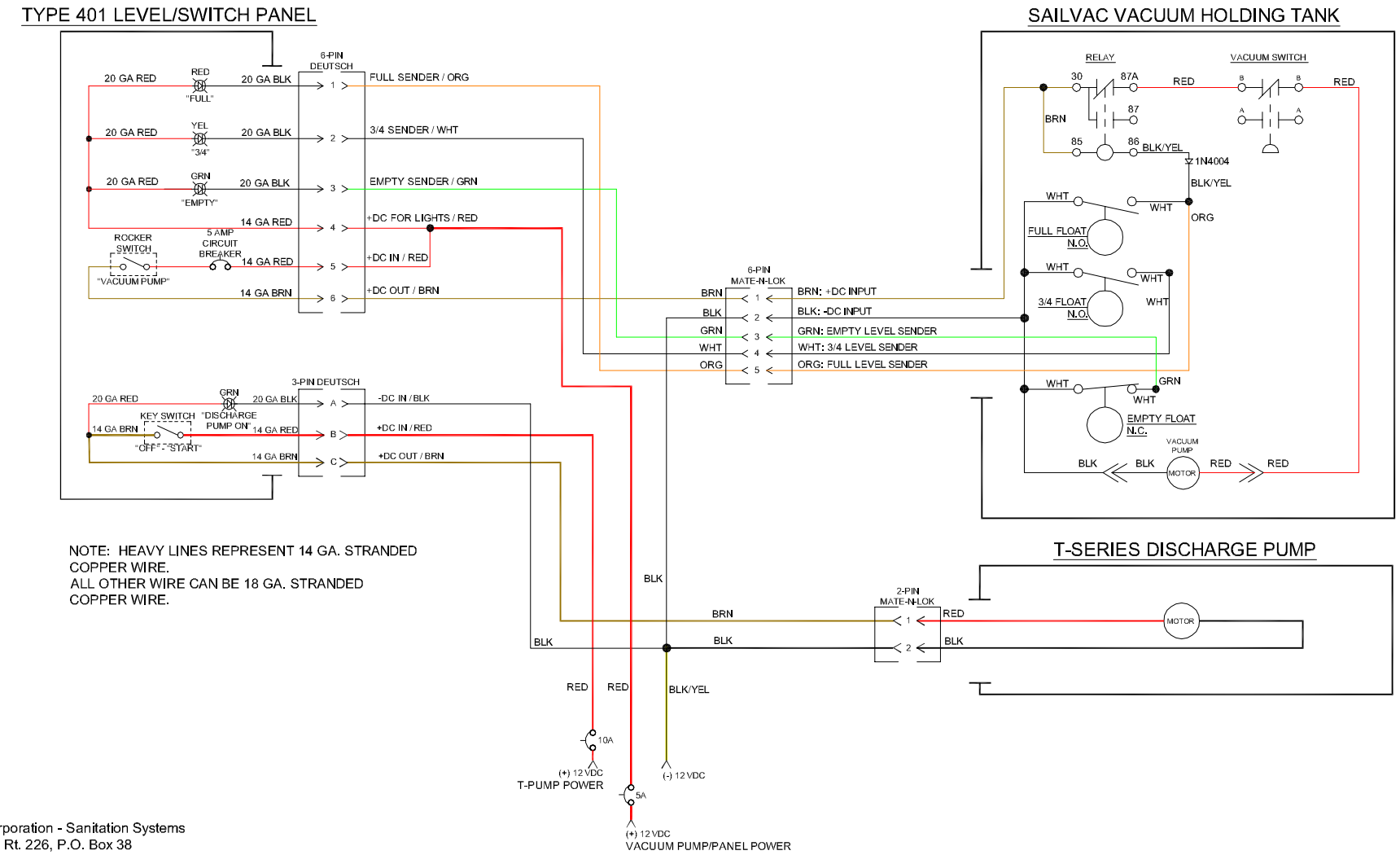

Dometic Corporation - Sanitation Systems
13128 State Rt. 226, P.O. Box 38
Big Prairie, OH 44611-0038 USA
Telephone: 330-496-3211
Fax: 330-496-3097
Email: sealand@dometicusa.com